HAIGH

Waste Water Experience & Innovation

Pipeliner™

Pipeline Maceration

www.haigh.co.uk

Waste Water Experience & Innovation

Pipeliner™

Pipeline Maceration

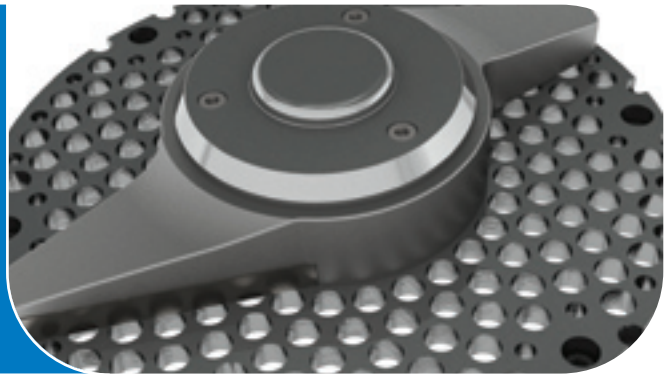

The Haigh Pipeliner™ range provides a reliable, straightforward system for disintegration, maceration or conditioning of solids in flow.

The Haigh Pipeliner™ is designed to fit into the suction line of raw sewage or sludge pump, homogenising the medium to improve downstream process, whilst protecting high performance pumps from tramp and rag debris in the medium.

It is a disintegrating device for raw sewage and sludges up to 6% solid matter in a pipeline under operating conditions ranging from – 1 bar to + 4 bar.

The range consists of a conditioning cutterhead co-axially mounted specifically designed to handle raw sewage and sludge. An external method of pumping is required.

The cutters consist of a steel headstock with tungsten carbide wear blades rotating against a stationary alloy steel shearplate with a hardness of 50-55 rockwell. The size of the holes in the shearplate may be specified to suit the application. The cutters can be replaced without disturbing the mechanical seal. The seal will rotate in an oil bath to ensure adequate cooling and lubrication which have a sealing rings of differing grades of tungsten carbide.

Ease of maintenance

The drawback design of the Pipeliner™ allows the easy removal of the cutting elements without disrupting the surrounding pipework. A standby cutter cartridge assembly can be economically purchased to avoid the cost of an entire second machine.

Positive cut

Highly effective cutting action gives controlled particle size and eliminates the tendency of shredded solids to reform.

Strong agitation

Ideal for providing homogeneous waste in suspension.

Easy to service

Cutters can be changed within minutes with perfect alignment using only a maximum of two allen keys. No special tools are required.

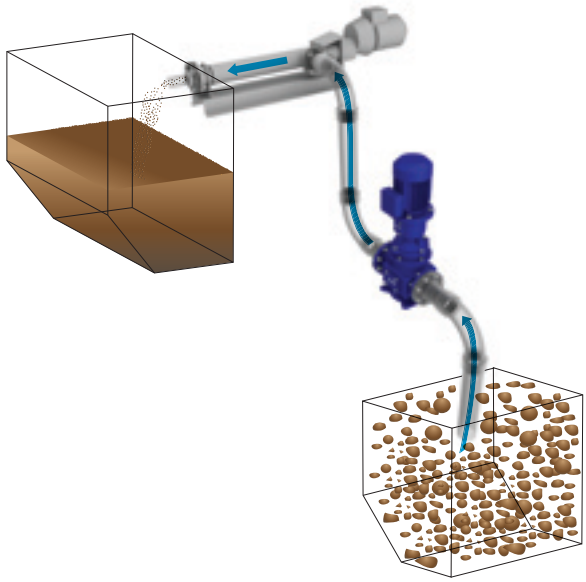

Typical Pipeliner™ installation showing conditioning of sludge

Headloss

When installing a pipeliner there is a pressure loss through the unit which increases with flow rate. This must be taken into consideration when designing the system.

The table below shows the flow rate on raw sewage at a pressure loss of 1.0m through the unit.

Model	Nominal speed rpm	Flow rate m^3/hr raw sewage
150	1440	20
200	960	35
300	960	65
400	360	185
400	480	160

Pipeliner™ 150/200/300/400 Specification

SPECIFICATIONS

OPERATING CONDITIONS:
For pressures between - 1 bar & +4 bar. (fixed headstock for inlet pressures >0.5 bar).

MOTOR INTERFACE:
In their standard configuration pipeliners are provided with mounting flanges to standard IEC motor flange dimensions.

BEARINGS:
Heavy duty, sealed for life.

SEALS:
Mechanical seal, tungsten carbide faces lubricated within oil bath.

CUTTERHEAD ASSEMBLY:
Consists of a self compensating headstock tipped with tungsten carbide inserts rotating against a stationary hardened tool steel shearplate with holes within it.

SHEARPLATE:
All Pipeliners are fitted with standard cut shearplates, smaller hole sizes are available on application, noting that capacities will reduce with hole size.

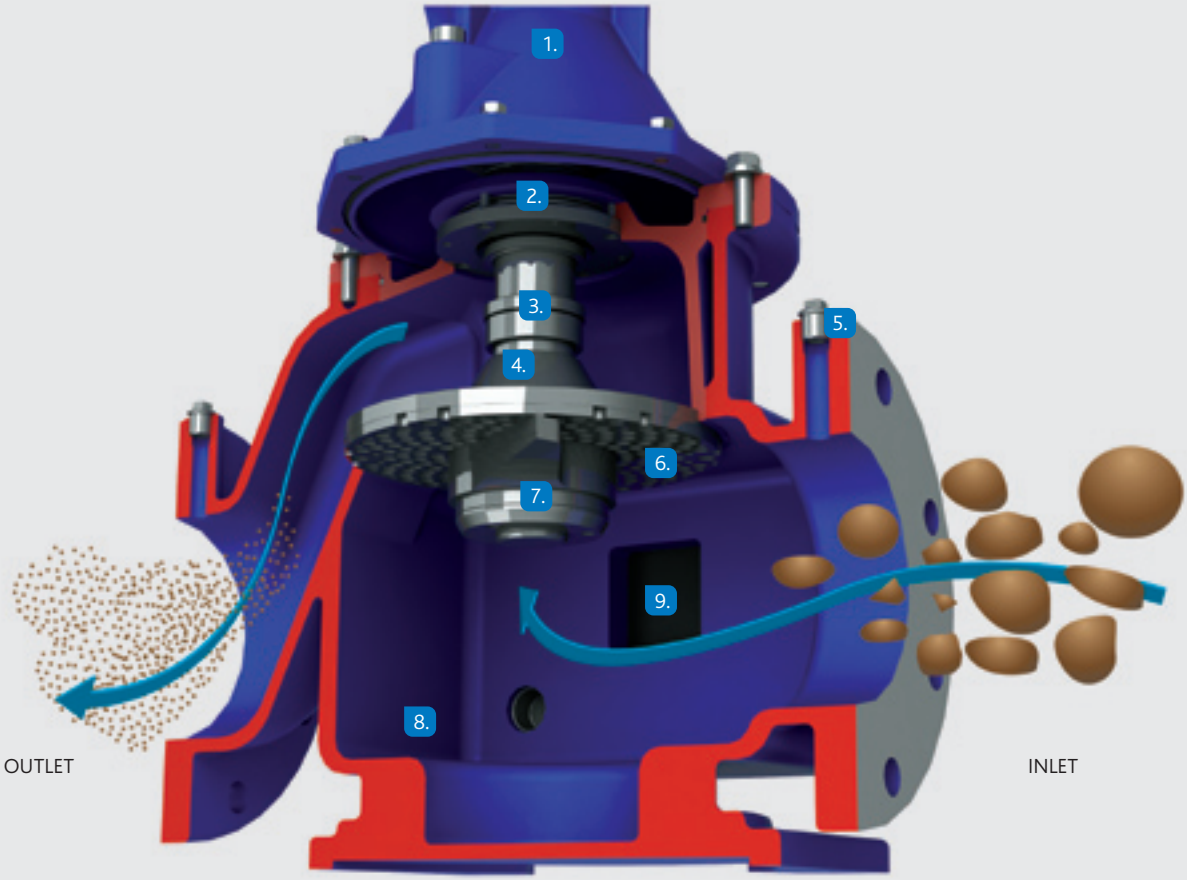

1. Robust bearing assembly sealed for life
2. Precision mechanical seal running in oil bath
3. Stainless steel sleeving fully protects shaft from medium
4. Totally enclosed spring housing for compensating cutter mechanism
5. 3/4 inch plug for pressure gauge
6. Fixed precision lapped alloy steel shearplate 50-55 rockwell
7. Rotating headstock with tungsten carbide blades
8. Settling out sump for stones and metallic objects
9. Access covers on both sides to clean out sump

Pipeliner™ 150 Series

Drive Interface
- D90 (B5)

Drive:
1. 1.5kW, 1440rpm nominal

Inlet / Outlet
- EN1092-1/DN 100/PN 16

Pipeliner™ 200 Series

Drive Interface
- D112 (B5)

Drive:
1. 2.2kW, 960 rpm nominal
2. 1.5kW, 720 rpm nominal

Inlet / Outlet
- EN1092-1/DN 100/PN 16

Pipeliner™ 150 Flow Rate Capacities (standard shearplate)

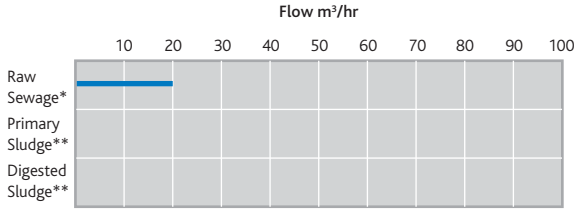

* Up to 480mg/l Solids
** Up to 6% Dry Solids

Pipeliner™ 200 Flow Rate Capacities (standard shearplate)

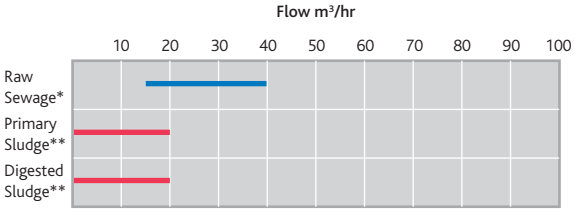

* Up to 480mg/l Solids
** Up to 6% Dry Solids

960rpm only
720rpm only

Pipeliner™ 150 Dimensions

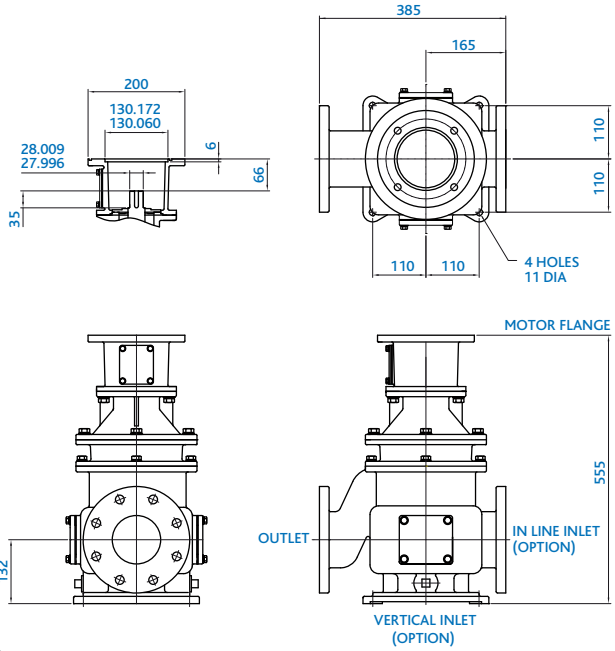

Pipeliner™ 200 Dimensions

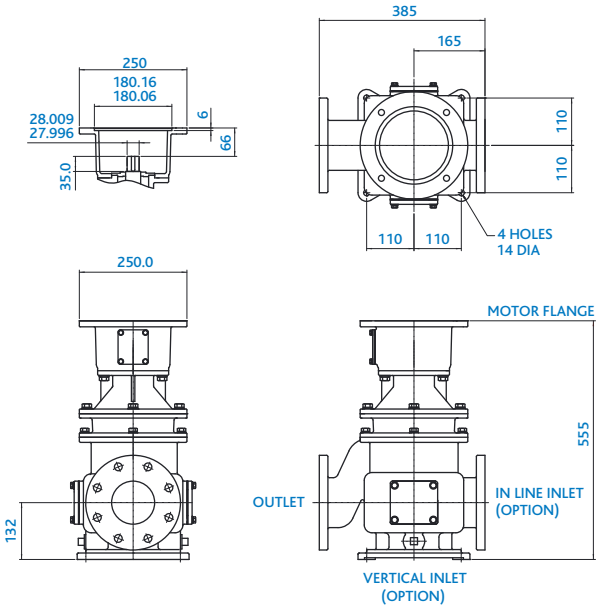

Pipeliner™ 300 Series

Drive Interface
- D132 (B5)

Drive:
1. 3.0kW, 960 rpm nominal
2. 2.2kW, 550 rpm nominal

Inlet / Outlet
- EN1092-1/DN 150/PN 16

Pipeliner™ 400 Series

Drive Interface
- D132 (B5)

Drive:
1. 5.5kW, 360 rpm nominal
2. 7.5kW, 480 rpm nominal

Inlet / Outlet
- EN1092-1/DN 200/PN 16

Pipeliner™ 300 Flow Rate Capacities (standard shearplate)

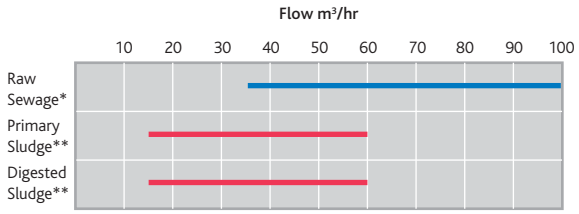

* Up to 480mg/l Solids
** Up to 6% Dry Solids

960rpm
550rpm

Pipeliner™ 400 Flow Rate Capacities (standard shearplate)

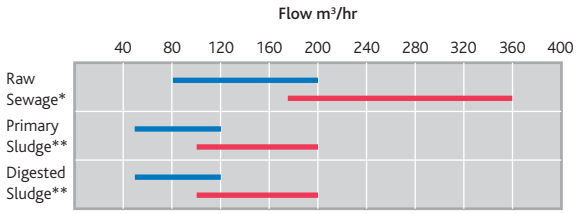

* Up to 480mg/l Solids
** Up to 6% Dry Solids

360rpm
480rpm

Pipeliner™ 300 Dimensions

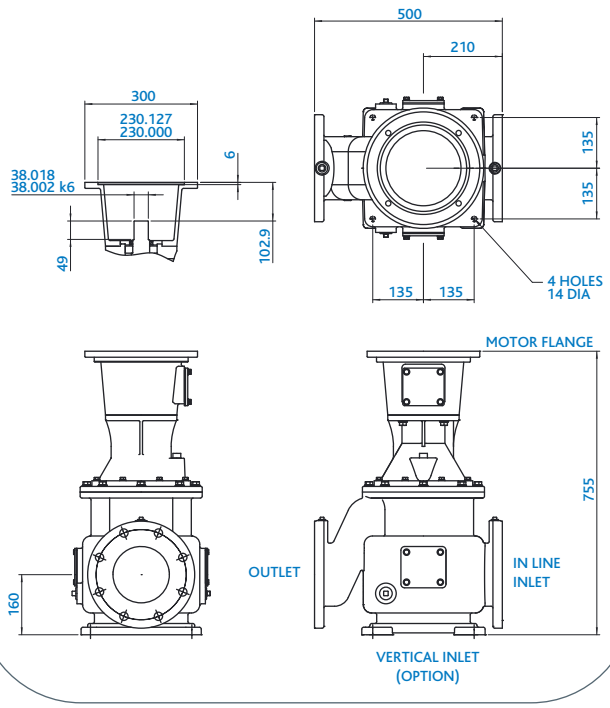

Pipeliner™ 400 Dimensions

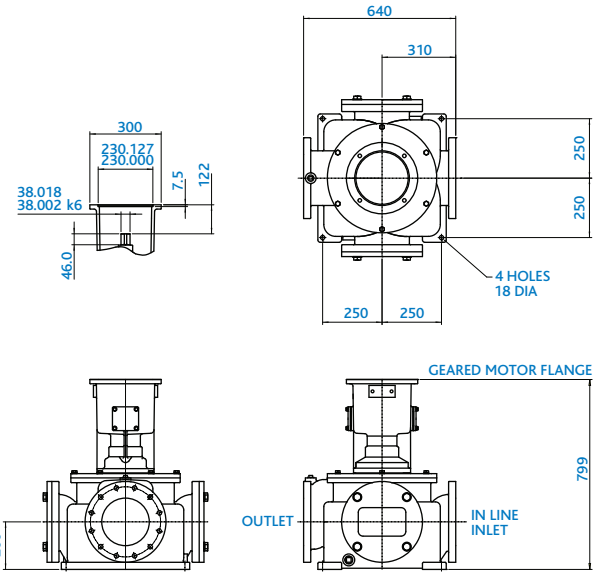

Australian & New Zealand Distributor:

Ph: +61 8 8275 8000
sales@globalpumps.com.au
www.globalpumps.com.au

Waste Water Experience & Innovation

www.haigh.co.uk

It is the policy of our company to continually improve our products and accordingly we reserve the right to alter specifications and appearance without notice.

E3222/0910

The Haigh Engineering Company Limited
Alton Road, Ross-on-Wye, Herefordshire HR9 5NG

Tel: +44 (0) 1989 763131
Fax: +44 (0) 1989 566276

info@haigh.co.uk

BRITISH WATER
expertise worldwide

The pulp used for manufacturing this paper is from mills that are certified to ISO 14001. ECF pulp sourced from sustainable forests.